N/A

240540
FT557T
9456123480

230584
FT558Q
9456123580

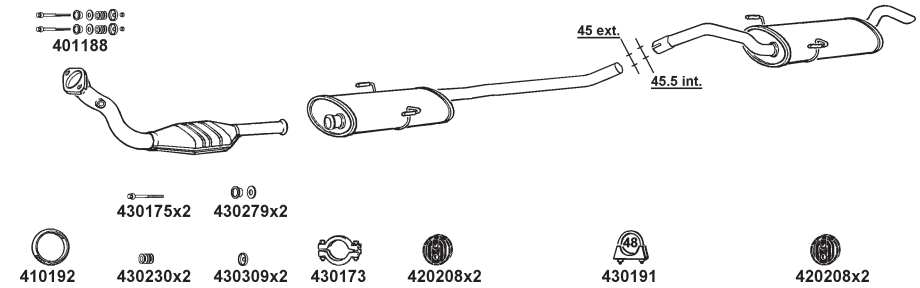

SCUDO 1.6i Kat

1581cc (58 kW,79 CV,HP,PS)
Mot: 220A2

Typ: 220ZG5,220XG,220XG5,220YG5
1996→

TSN: 047,097,559

330451

210168
PG130G

270423
FT559P
9456123280

230599
FT561L
9456123380

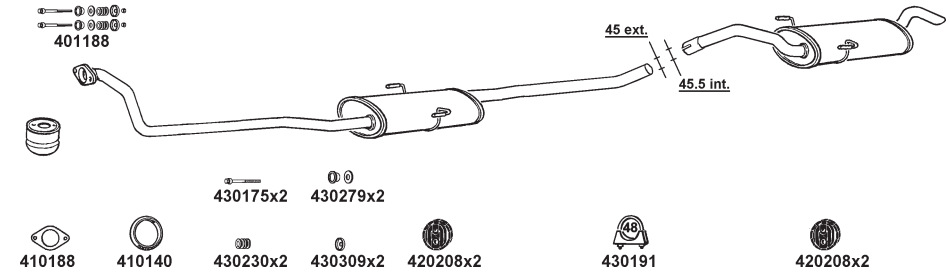

SCUDO 1.9D Diesel

1905cc (51 kW,69 CV,HP,PS)
Mot: D9B

LHD

Typ: 220ZF5,220ZF,220XF5,220YF5
1996→

TSN: 048,095,558

330452

130333
CN368B
1475423080

250391
CN365E
9456122980

230532
FT562K
9456123180

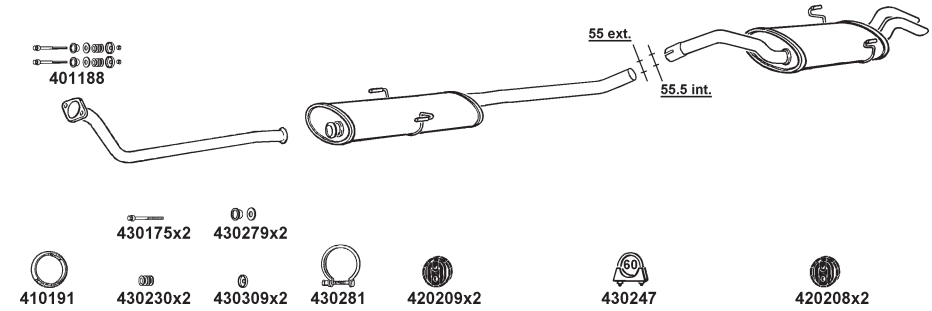

SCUDO 1.9TD Turbo Diesel

1905cc (68 kW,92 CV,HP,PS)
Mot: D8B

Typ: 220ZE5,220XE5,220YE5
1996→

TSN: 049,094,557

330454

N/A

250391
CN365E
9456122980

230532
FT562K
9456123180

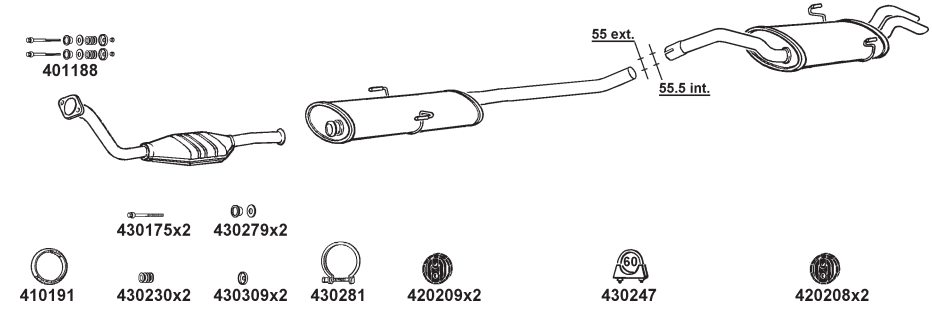

SCUDO 1.9TD Kat Turbo Diesel

1905cc (68 kW,92 CV,HP,PS)
Mot: D8B

Typ: 220ZE5,220XE5,220YE5
1996→

TSN: 049,094,557

330455